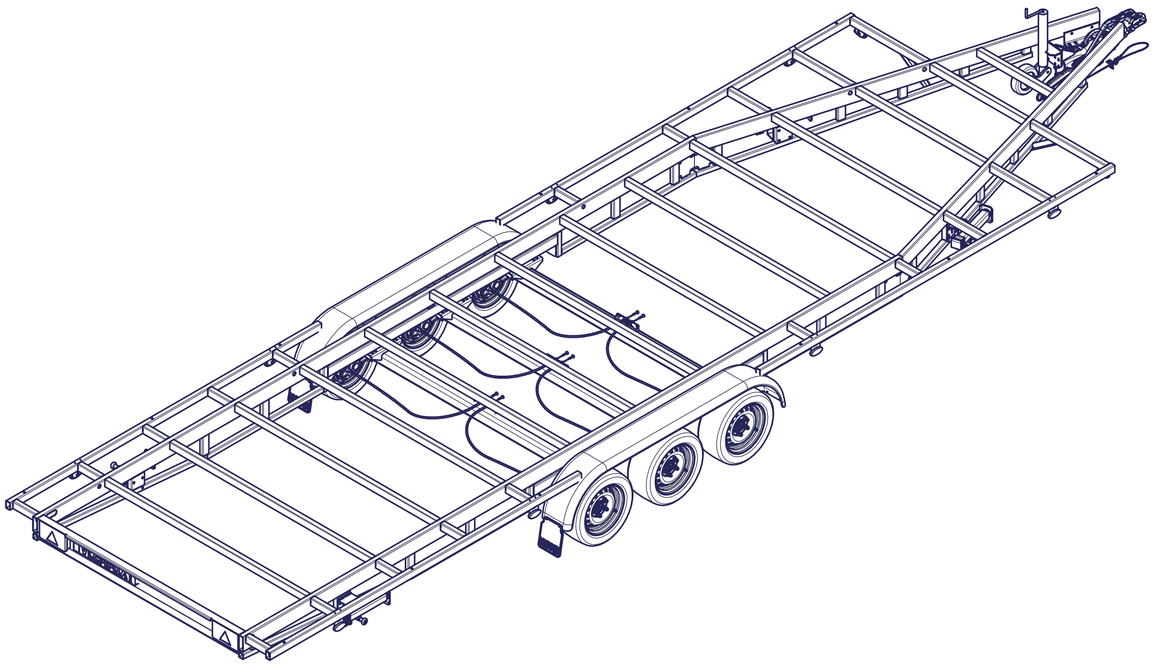

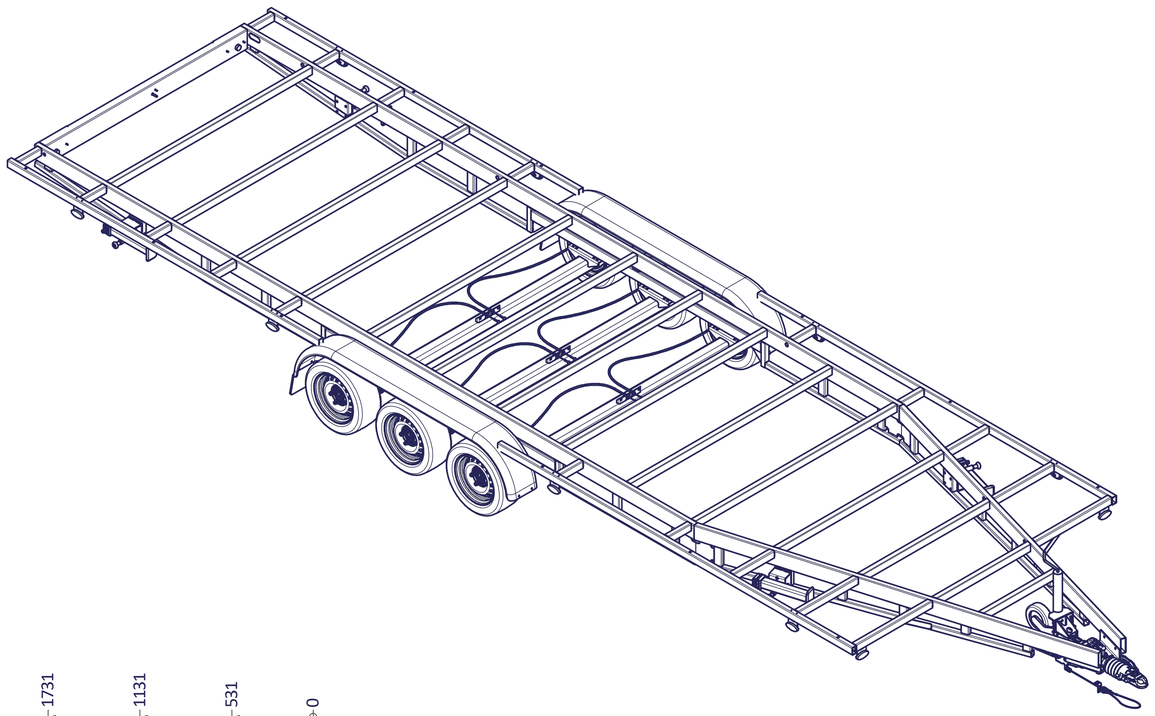

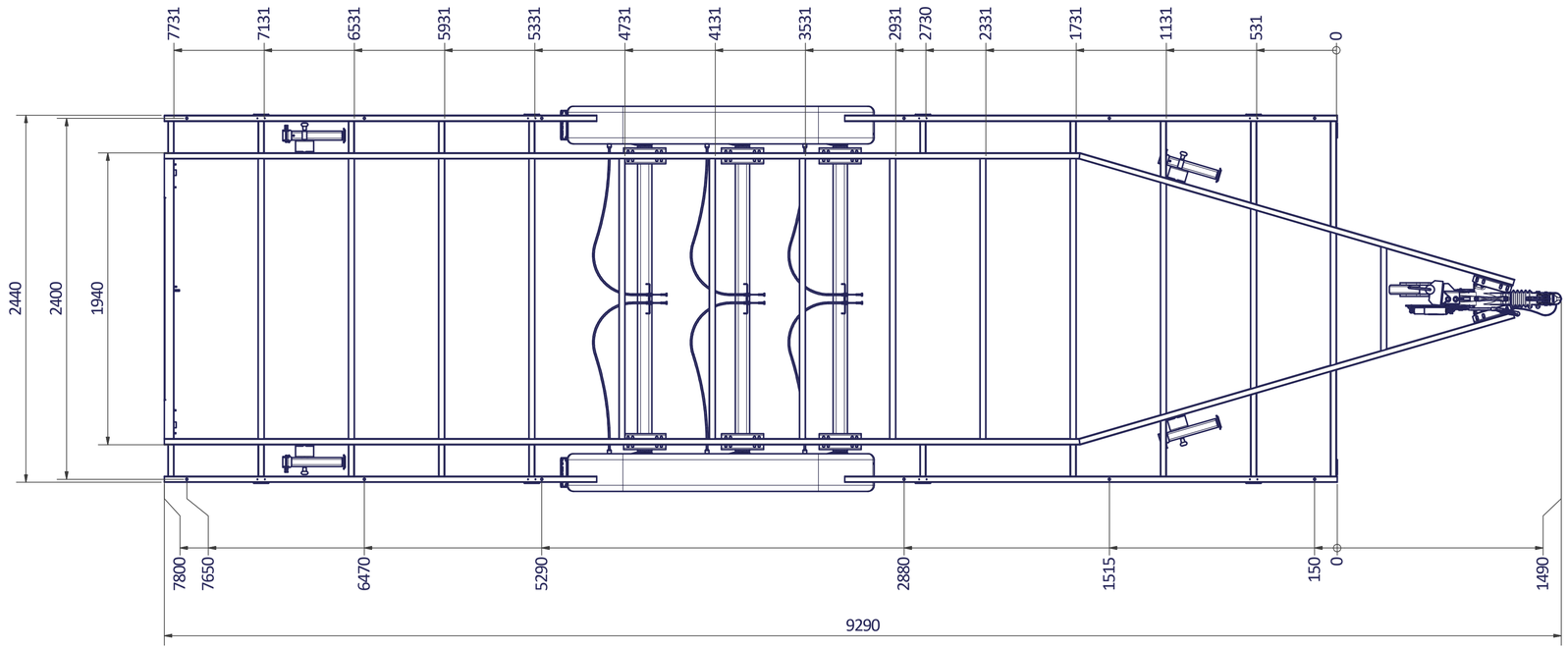

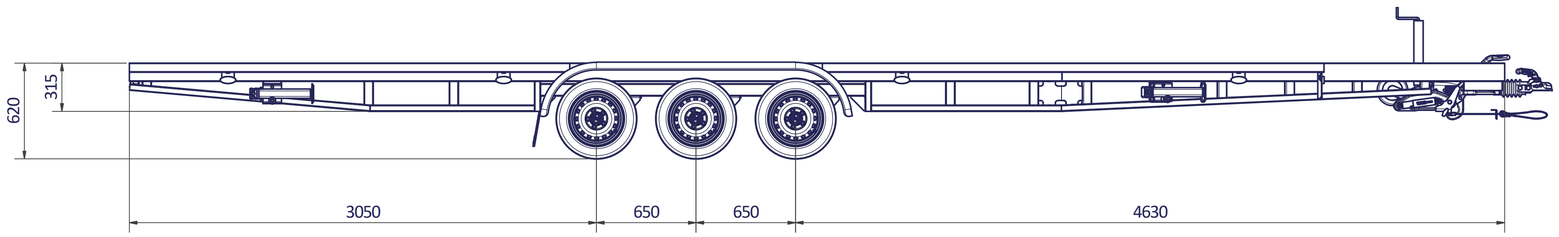

TINY HOUSE 780 PLATEAU

Surface treatment: FRAME - ZINC PLATED

QTY:

© VLEMMIX AANHANGWAGENS
This drawing and its contents may not be made accessible and/or duplicated for others without permission. All rights reserved.

TOLERANCE: ISO 2768-MK	UNIT: mm	DRAWN BY: J.H.	VLEMMIX aanhangwagens
		DATE: 20-7-2020	
PROJECT/DRAWING NO.: TINY HOUSE_PLATEAU			
SCALE: 1 : 20	DESCRIPTION: TINY HOUSE PLATEAU		SHEET: 5 / SHEETS: 9

A1